REVISED STARTING SERIAL # 77578

ELECTRIC POWERED
MODEL S-EC
PARTS LIST MANUAL

Single-Disc Concrete Floor Grinder

EDCO
100 Thomas Johnson Drive, Frederick, MD 21702-4600 USA
Phone (301) 663-1600 • 1-800-638-3326
Fax (301) 663-1607 • 1-800-447-3326
Website: www.edcoinc.com • Email: sales@edcoinc.com

Printed in USA
©2004

READ AND UNDERSTAND THE OPERATORS INSTRUCTION MANUAL THOROUGHLY BEFORE ATTEMPTING TO OPERATE THIS EQUIPMENT. Death or serious injury could occur if this machine is used improperly.

SAFETY MESSAGES

The safety instructions are proceeded by a graphic alert message of DANGER, WARNING, or CAUTION.

DANGER Indicates an imminent hazard which, if not avoided, will result in death or serious injury.

WARNING Indicates an imminent hazard which, if not avoided, can result in death or serious injury.

CAUTION Indicates hazards which, if not avoided, could result in serious injury and or damage to the equipment.

GASOLINE

Powered Equipment

DANGER

- Do not operate gasoline powered equipment without adequate ventilation. Carbon monoxide is an invisible, odorless gas that can kill.

ELECTRICAL

Powered Equipment

DANGER

- **ELECTRICAL HAZARD** - Be sure equipment is properly grounded. Failure to comply could kill or result in serious injury.

WARNING

The engine exhaust from this product contains chemicals known to the State of California to cause cancer, birth defects or other reproductive harm.

GENERAL INSTRUCTIONS

CAUTION WARNING

- You must read and understand the operators instruction manual and all other manuals associated with this machine. For your safety and the safety of others around you, it is extremely important to fully understand how to operate this machine in the way it was intended. Different model machines or older/newer versions of the same model may have different parts and controls that you need to understand. If instructions are not readable or available DO NOT USE this machine and contact the factory for a replacement Manual.
- You must be able to physically handle the bulk weight and power of this machine. If not properly controlled this machine can cause death or serious injury.
- Do not operate this machine in an impaired mental state. You must be able to exercise good judgement and reactions to maintain a safe working environment.
- This is a “one person” machine which means only one operator can be operating the machine at any one time. For the safety of others, maintain a safe operating distance to other personnel. Your work area should be defined and appropriately marked so bystanders and coworkers do not stand or walk near this machine and end up seriously injured by flying debris or exposing them to harmful noise or dust.
- This equipment is for Commercial use. Although this is a “one person” machine your work team should understand how to shut this machine off and quickly get medical help if an accident strikes the operator.
- Keep all guards in place during operation. The guards are to provide protection from inadvertent contact with dangerous moving parts, pinch points, or hot surfaces.
- Wear appropriate Personal Protective Equipment (PPE) including safety glasses, safety boots, work gloves, respiratory protection, hearing protection, and head protection. Do not wear loose clothing that can get tangled in moving parts. Failure to do so could result in dismemberment or death. **Wear an approved respirator when removing hazardous materials or when grinding/cutting dry materials. Some dust particles such as concrete dust can contain silicate particles which can cause silicosis (a very serious lung disease). Contact NIOSH or OSHA for further details. When wet grinding/cutting, avoid contact with the concrete/asphalt slurry which can cause serious skin irritations.**
- You must maintain this machine per the maintenance schedule in the operator manual. Remember before adjusting, servicing, or fueling this machine, disconnect the source of power to the machine by disconnecting the spark plug (Gas models), or by unplugging the electrical power cord (electric models) or air hose (Pneumatic models) AT THE MACHINE so you can assure yourself it remains unplugged while you are working on it. Do not modify this machine. Use only genuine EDCO parts and accessories. Repairs and service should be performed by approved EDCO dealers or authorized technicians.
- You should look carefully around the area before you begin work so you can identify potential hazards such as deck inserts, pipes, columns, openings, electrical cords or outlets, or any other objects protruding from the slab surface.
- This machine has no brain so you must use your own. There is no substitute for safety. The safety decals on the machine are to serve as a reminder for information you must already know before you begin using this machine. Take a moment to reread the safety decals each time you use the machine. If your machine is missing any decals, contact the factory for a replacement (EDCO 1-800-638-3326).

100 Thomas Johnson Drive, Frederick, MD 21702-4600 USA
Phone (301) 663-1600 • 1-800-638-3326
Fax (301) 663-1607 • 1-800-447-3326
Website: www.edcoinc.com • Email: sales@edcoinc.com

PARTS LIST MANUAL
EDCO MODEL S-EC

Section	Page Number
Safety Messages / General Instructions	2
How To Order Replacement Parts	3
Illustration 1: Main Grouping	4,5
Illustration 2: Motor & Belt Drive Grouping	6,7
Illustration 3: Inner Frame Grouping	8
Illustration 4: Multi-Accessory Disc Grouping	9
Illustration 5: Dyma-Sert Accessory	10
Illustration 6: Strip-Sert Accessory	10
Illustration 7: Pad Driver Disc and Silabide Pad Accessory	11
Limited Equipment Warranty	back cover

S-EC SINGLE-DISC CONCRETE FLOOR GRINDERS		
PART NO.	MODEL	ELECTRIC MOTOR OPTION
50200	SEC-1.5L	LESSON 1.5HP, 1ø, 60HZ, 115/230 VOLTS, 17.2/8.6 F.L. AMPS
52500	SEC-2B	BALDOR 2HP, 1ø, 50HZ, 220 VOLTS, 10 F.L. AMPS

HOW TO ORDER REPLACEMENT PARTS

☐ To insure product safety and reliability, always use genuine EDCO replacement parts when making repairs to the equipment.

☐ When calling for parts, specify the MODEL and SERIAL NUMBER of the machine which can be found on the NAME PLATE. Keep that information in the space provided. In addition to this information, give part number, description and quantity as listed on the parts list to your parts representative.

☐ Please note: Due to improvements and changes in the equipment, the illustrations shown may be different than the actual machine.

FILL IN INFORMATION BELOW

Date of Purchase _____

Name of Machine _____

Model # _____

Serial # _____

Belt Size(s) _____

Toll Free: 1-800-638-3326
FAX: 1-800-447-3326
email: sales@edcoinc.com
www.edcoinc.com

©2004

ILLUSTRATION 1 : MAIN GROUPING

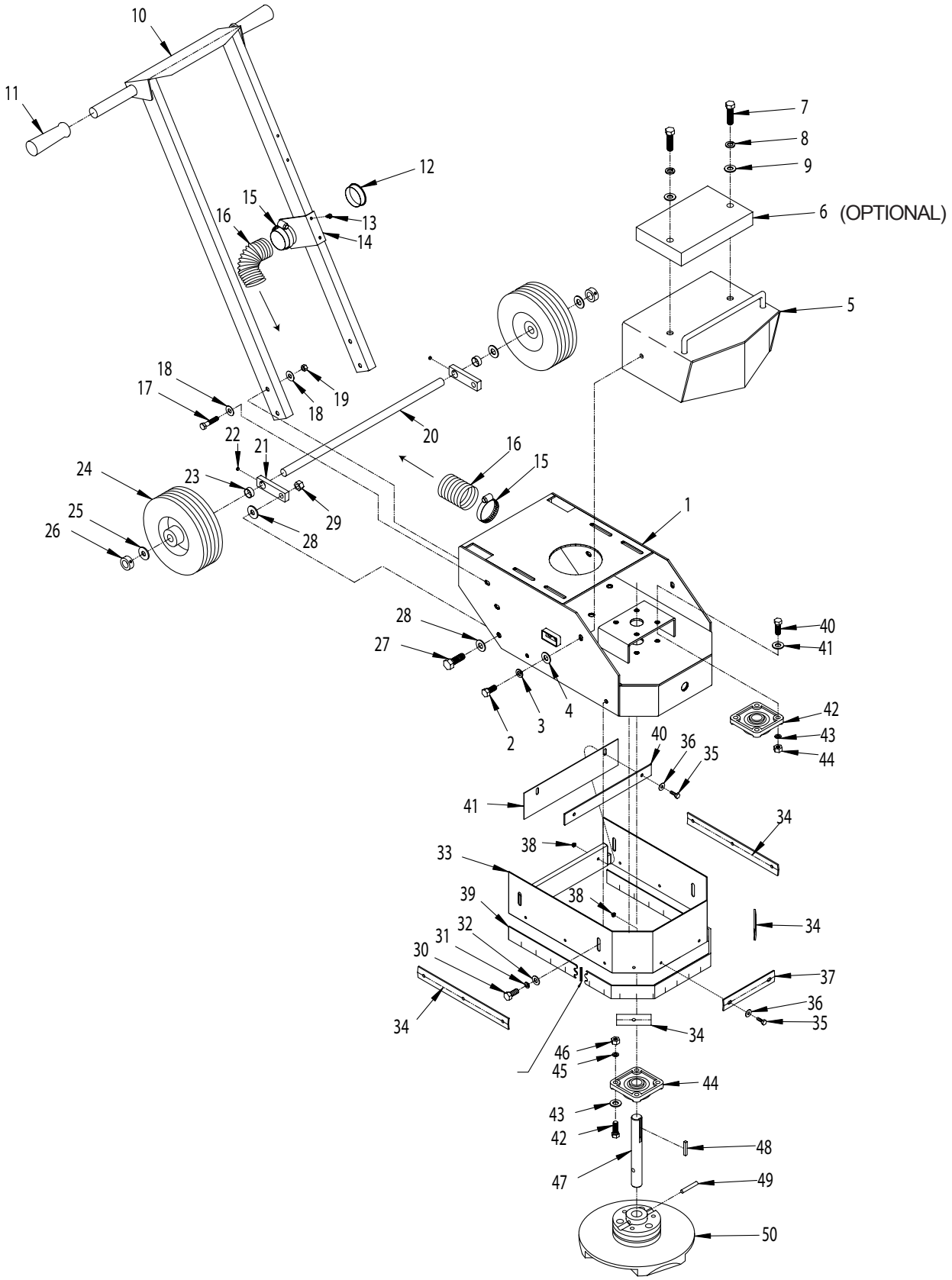

100 Thomas Johnson Drive, Frederick, MD 21702-4600 USA
Phone (301) 663-1600 • 1-800-638-3326
Fax (301) 663-1607 • 1-800-447-3326
Website: www.edcoinc.com • Email: sales@edcoinc.com

PARTS LISTING - ILLUSTRATION 1 : MAIN GROUPING			
ITEM#	PART#	DESCRIPTION	QTY.
1	86224	MAIN FRAME	1
2	10907	SCREW, CAP 3/8-16 X 3/4	2
3	10811	WASHER, LOCK 3/8	2
4	10025	WASHER, FLAT 3/8 SAE	2
5	86203	HOOD	1
6	86204	WEIGHT BLOCK, 24.5 LBS. (OPTIONAL)	1
7	10357	SCREW, CAP 1/2-13 X 2-1/4	2
8	10045	WASHER, LOCK 1/2	2
9	10312	WASHER, FLAT 1/2 SAE	2
10	86012	HANDLE BAR	1
11	10608	GRIP, HAND 1" MODEL AT	2
12	65021	PLUG, CAP 2" TUBE	1
13	10877	SCREW, CAP STSHW 10-24 X 1/2	2
14	86307	VACUUM PORT BRKT. 2"	1
15	10766	CLAMP, HOSE, SAE #28, ADJ. TO 2-1/4	2
16	86225	HOSE, FLEX 2"ID X 24"L	1
17	10029	SCREW, CAP 3/8-24 X 1-3/4	4
18	10025	WASHER, FLAT 3/8 SAE	8
19	10004	NUT, LOCK 3/8-24	4
20	86206	AXLE SHAFT 3/4DIA. X 19-5/8L	1
21	86305	FLIP-HOLDER, WHEEL AXLE	2
22	10139	SCREW, SET 1/4-20 X 5/16	2
23	80022	SPACER, WHEEL 13/16"ID X 13/16"L	2
24	79013	WHEEL 8 X 2-1/2 X 3/4"BRG.	2
25	10009	WASHER, FLAT 3/4 SAE	2
26	10428	COLLAR, LOCKING 3/4"ID	2
27	10321	SCREW, CAP 1/2-20 X 1-1/4	2
28	10312	WASHER, FLAT 1/2 SAE	4
29	10205	NUT, LOCK 1/2-20	2
30	10055	SCREW, CAP 3/8-16 X 1	4
31	10811	WASHER, LOCK 3/8	4
32	10025	WASHER, FLAT 3/8 SAE	4
33	86202	SKIRT	1
34	86217	SKIRT RETAINING STRIP, SIDE 12"	2
35	10018	SCREW, CAP 1/4-20 X 3/4	12
36	10602	WASHER, FLAT 1/4 SAE	12
37	86215	SKIRT RETAINING STRIP, FRONT 6-3/4	1
38	10861	NUT, KEPS 1/4-20	12
39	86219	SKIRT RUBBER 3 X 41	1
40	86218	SKIRT RETAINING STRIP, REAR 11-1/2	1
41	86220	SKIRT RUBBER 3 X 12-1/2	1
42	10003	SCREW, CAP 7/16-20 X 1-1/4	8
43	10062	WASHER, FLAT 7/16 SAE	8
44	77008	BEARING, BALL 1" 4-HOLE FLANGE, ND	2
45	10450	WASHER, LOCK 7/16	8
46	10481	NUT 7/16-20	8
47	86004	SHAFT, DRIVEN 1" X 7.813"L	1
48	10301	KEY 1/4 SQ X 1-1/2	1
49	10063	PIN, ROLL 3/8 X 2	1
50	8888	DISC ASSY. COMPLETE, MULTI-ACCY. RH (REFER TO ILLUS. 4 FOR BREAKDOWN)	1

©2004

ILLUSTRATION 2 : MOTOR & BELT DRIVE GROUPING

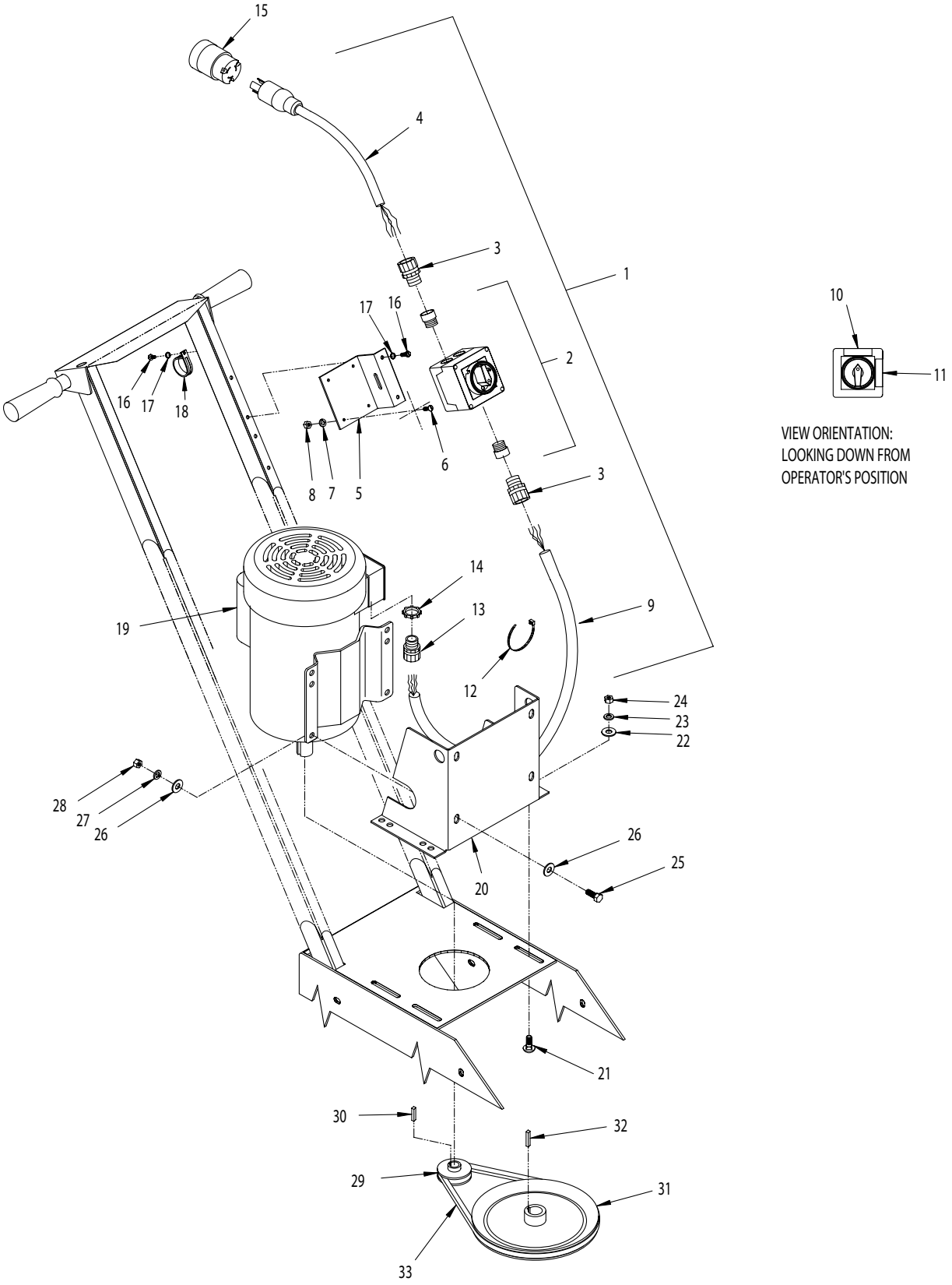

100 Thomas Johnson Drive, Frederick, MD 21702-4600 USA
Phone (301) 663-1600 • 1-800-638-3326
Fax (301) 663-1607 • 1-800-447-3326
Website: www.edcoinc.com • Email: sales@edcoinc.com

PARTS LISTING - ILLUSTRATION 2 : MOTOR & BELT DRIVE GROUPING			
ITEM#	PART#	DESCRIPTION	QTY.
1	77028	SWITCH & WIRE HARNESS ASSY. (INCLUDES ITEMS 2-11)	1
2	77043	SWITCH, ROTARY CAM ON/OFF, LOVATO (INCLUDES (2) 1/2 NPT ADAPTERS)	1
3	41130	STRAIN RELIEF 1/2NPT X .550-.650"	2
4	77044	PLUG W/ 12/3 WIRE HARNESS, LOCKING	1
5	77042	BRACKET, SWITCH BOX, LOVATO	1
6	11663	SCREW, MACHINE 8-32 X 1/2 (LOCATED INSIDE SWITCH BOX)	4
7	10461	WASHER, LOCK, INT. TOOTH #8	4
8	10462	NUT 8-32	4
9	77045	WIRE HARNESS 12/3 X 39"LOA	1
10	91173	DECAL, OFF (HORZ.)	1
11	91174	DECAL, ON (VERT.)	1
12	10982	TIE, CABLE, BLACK NYLON 11-1/4"	2
13	41130	STRAIN RELIEF 1/2NPT X .550-.650"	1
14	10740	CONDUIT LOCK NUT 3/4 NP	1
15	40041	PLUG CONNECTOR, LOCKING 20A /125V	1
16	10877	SCREW, CAP STSHW 10-24 X 1/2	2
17	10831	WASHER, LOCK, INT. TOOTH #10	2
18	11566	CLAMP, LOOM, 1-3/4" (SAE SIZE 28)	1
19		MOTOR	1
	16035	LEESON 1.5HP-1P-60HZ-1740RPM-115/208-230V (SHOWN)	
	16019	BALDOR 2HP-1PH-50HZ 1425RPM-110/220V	
20	77037	MOUNT, MOTOR	1
21	10802	BOLT, CARRIAGE 3/8-16 X 1 FULL THD.	4
22	10025	WASHER, FLAT 3/8 SAE	4
23	10811	WASHER, LOCK 3/8	4
24	10404	NUT 3/8-16	4
25	10021	SCREW, CAP 3/8-24 X 1	4
26	10025	WASHER, FLAT 3/8 SAE	8
27	10811	WASHER, LOCK 3/8	4
28	10014	NUT 3/8-24	4
29	77017	SHEAVE 3"OD X 1GR.B X 7/8"BORE	1
30	-------	KEY 3/16SQ X 1-3/8"L (INCLUDED W/ MOTOR)	1
31	86009	SHEAVE 9"OD X 1GR.B X 1"BORE	1
32	10301	KEY 1/4 SQ X 1-1/2	1
33	10278	BELT BX-34 COG	1

©2004

ILLUSTRATION 3 : INNER FRAME GROUPING

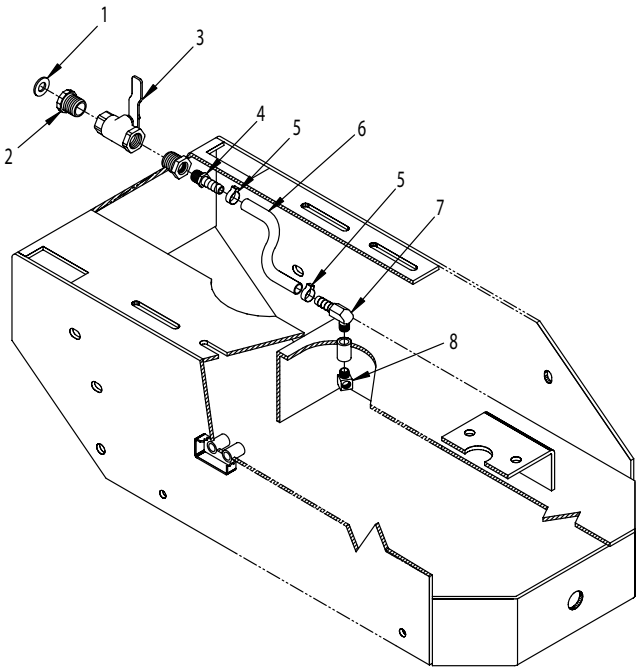

WATER VALVE GROUPING

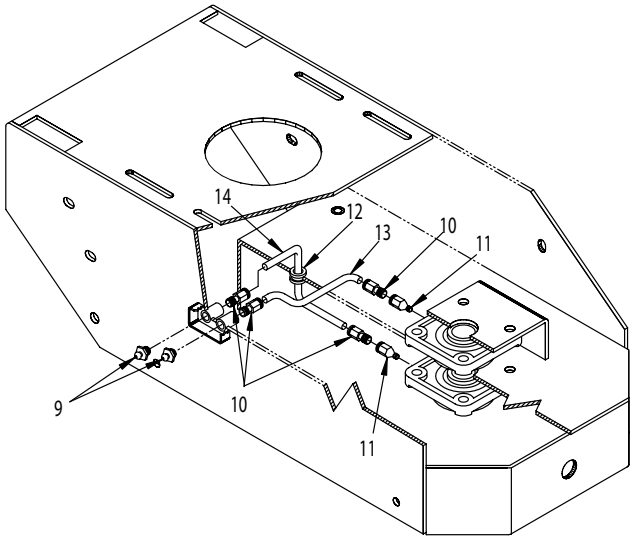

BEARING GREASE FITTING GROUPING

ITEM#	PART#	DESCRIPTION	QTY.
1	10070	WASHER, HOSE 3/4 (INCLUDED W/ ITEM 2)	1
2	80021	CONN., SWIVEL FEM. 3/4HOSE X 1/2MPT	1
3	10711	VALVE, BALL 1/2 FPT	1
4	50075	BARB, 3/8 HOSEx1/4 MPT	1
5	50069	CLAMP, HOSE, SAE #6, ADJ. TO 13/16	2
6	86209	HOSE, WATER 3/8”IDx9-1/2”L	1
7	11562	BARB ELBOW 90, 3/8 HOSEx1/8 MPT	1
8	10772	ELBOW, STREET 1/8 NPTx45 (BRASS)	1
9	10953	FITTING, GREASE 1/8 NPT STRAIGHT	2
10	10599	FITTING, PUSH-IN 1/4TUBE X 1/8MPT	4
11	50541	ADAPTER, GREASE FIT. 1/8PT X 1/4-28	2
12	11560	GROMMET 7/16ID X 3/16GRV. X 9/16GD	1
13	86210	TUBE, NYLON 1/4"OD X 7-1/2"L	1
14	86211	TUBE, NYLON 1/4"OD X 10-1/4"L	1

100 Thomas Johnson Drive, Frederick, MD 21702-4600 USA
Phone (301) 663-1600 • 1-800-638-3326
Fax (301) 663-1607 • 1-800-447-3326
Website: www.edcoinc.com • Email: sales@edcoinc.com

ILLUSTRATION 4 : MULTI-ACCESSORY DISC ASSEMBLY

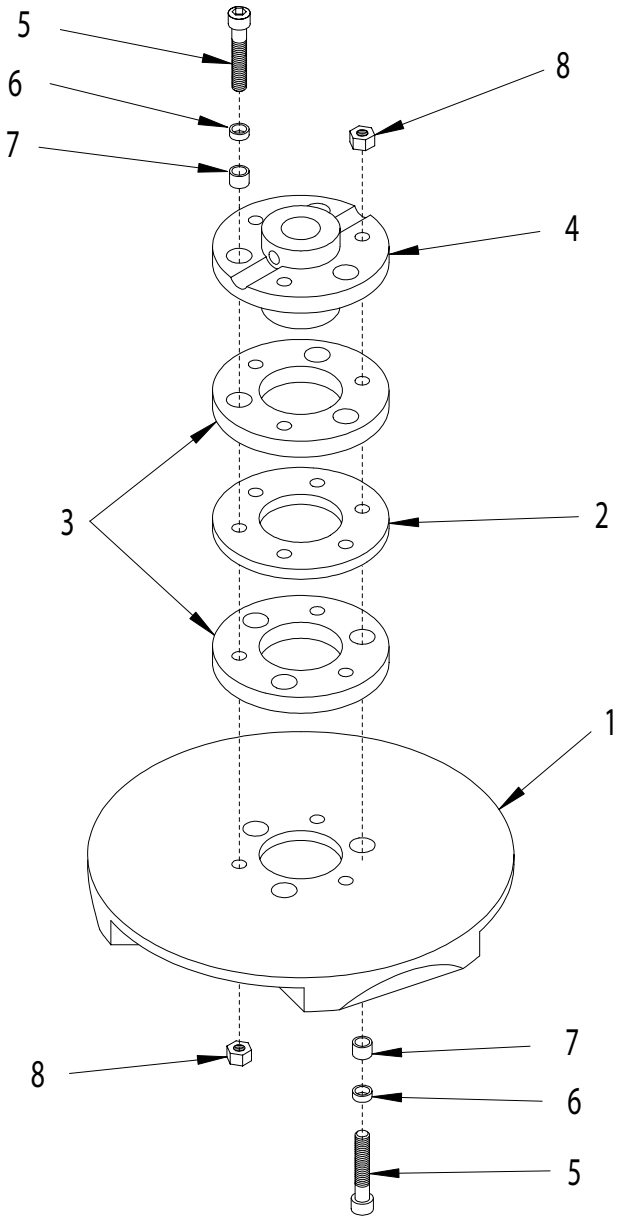

	#8888	DISC. ASSY. COMPLETE, MULTI-ASSY. RIGHT HAND	
ITEM#	PART#	DESCRIPTION	QTY.
1	77088	DISC ONLY, MUTLI-ACCESSORY R.H.	1
2	77020	RING, HUB CARRIER, 6-HOLE	1
3	10112	RING, NEOPRENE RUBBER, 6-HOLE, 1/2" THK	2
4	77010	HUB, ALUMINUM, 6-HOLE	1
5	10114	SCREW, SKT. HD. CAP 3/8-24x2-1/4	6
6	10113	SPACER, STEEL 9/16"ODx3/8"IDx7/32" THK	6
7	10011	SPACER, STEEL 5/8"ODx3/8"IDx3/8" THK	6
8	10004	NUT, LOCK 3/8-24	6

©2004

ILLUSTRATION 5 : DYMA-SERT™ ACCESSORY

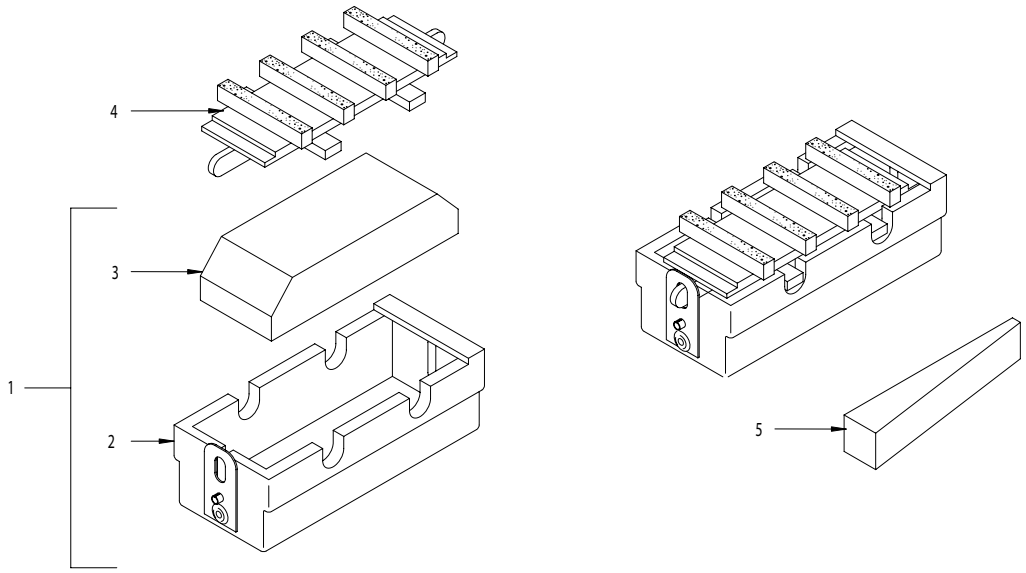

ITEM#	PART#	DESCRIPTION	QTY.
1	19120	CG221D DYMA-SERT HOLDING CASE W/PAD (INCLUDES ITEMS 2 & 3)	3
2	19121	DYMA-SERT HOLD. CASE INC CLIP & RIVET	1
3	19140	RUBBER SHOCK PAD, DYMA-SERT	1
4	--------	DYMA-SERT ASSEMBLY (SOLD SEPARATELY)	3
	19110	EG-1X, 30-40 GRIT	
4	19130	EG-2X, 30-40 GRIT	
	19180	EG-3X, 30-40 GRIT	
	19250	EG-5X, 50 GRIT	
	19260	EG-7X, 80 GRIT	
	19270	EG-9X, 120 GRIT	
5	12160	WEDGE CG225, HARDWOOD	3

ILLUSTRATION 6 : STRIP-SERT ™ ACCESSORY

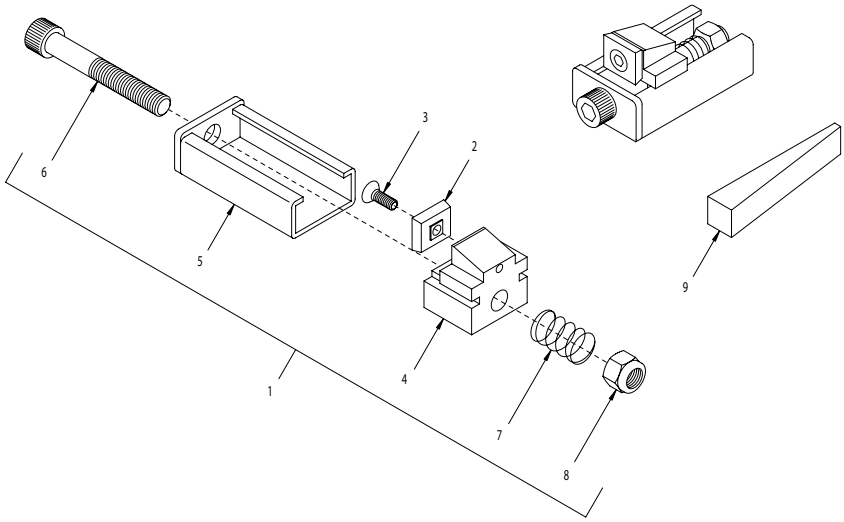

ITEM#	PART#	DESCRIPTION	QTY.
1		STRIP-SERT ASSEMBLY	3
	12400	ASSY. WITH PRO TUNGSERT (ITEMS 2-8)	
	12401	ASSY. W/O PRO TUNGSERT (ITEMS 3-8)	
2	12402	PRO TUNGSERT, 4 SIDED CARBIDE	1
3	10147	SCREW, FLAT HEAD SKT. 1/4-20 X 3/4	1
4	12403	TUNGSERT BLOCK, STRIP-SERT	1
5	12404	TUNGSERT HLDR, STRIP-SERT(RED BOX)	1
6	12405	SCREW, SKT.HD.CAP 1/2-13 X 3.5,GR.8	1
7	12406	SPRING, COMP. .765"OD X 1.25"FL	1
8	10155	NUT, HEX NYLON LOCK 1/2-13	1
9	12160	WEDGE CG225, HARDWOOD	3

100 Thomas Johnson Drive, Frederick, MD 21702-4600 USA
Phone (301) 663-1600 • 1-800-638-3326
Fax (301) 663-1607 • 1-800-447-3326
Website: www.edcoinc.com • Email: sales@edcoinc.com

ILLUSTRATION 7 : PAD DRIVER DISC & SILABIDE PAD ACCESSORY

OPTIONAL PAD DRIVER DISC ASSEMBLY			
ITEM#	PART#	DESCRIPTION	QTY.
1	76040	PAD DRIVER DISC ASSEMBLY	1
2	76042	HUB STUD, PAD DRIVER	1
3	76041	DISC ONLY 11", PAD DRIVER	1
4	10312	WASHER, FLAT 1/2 SAE	1
5	10304	SCREW, CAP 1/2-20 X 1	1
6	13013	SILABIDE PAD, 11" MEDIUM	1

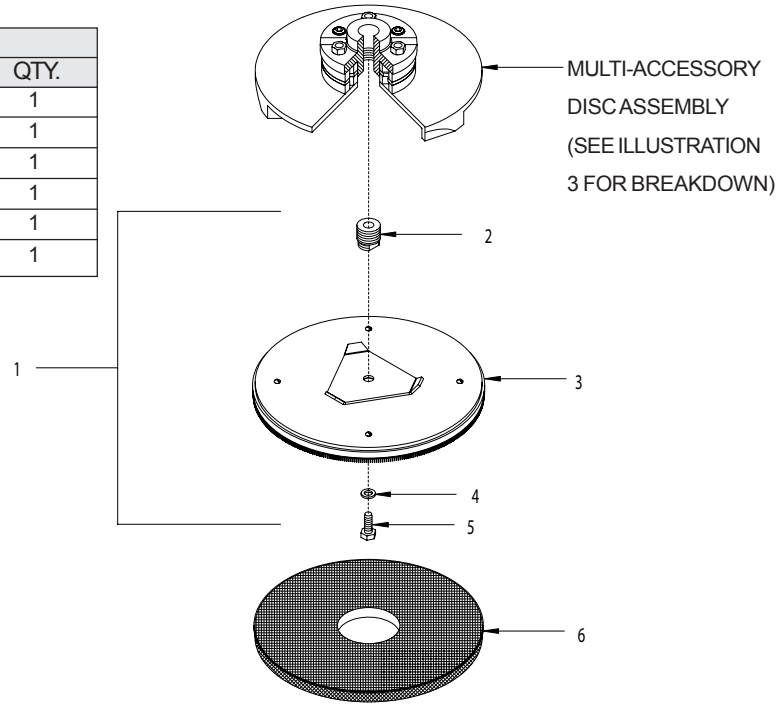

OTHER ACCESSORIES:

GRINDING STONES, SCARIFIER ASSEMBLIES, WIRE BRUSHES, AND DIAMOND POLISHING DISC ARE ALSO AVAILABLE. REFER TO PRICE LIST CATALOG OR CALL YOUR EDCO REPRESENTATIVE FOR INFORMATION.

100 Thomas Johnson Drive, Frederick, MD 21702-4600 USA
Phone (301) 663-1600 • 1-800-638-3326
Fax (301) 663-1607 • 1-800-447-3326
Website: www.edcoinc.com • Email: sales@edcoinc.com

Printed in USA
©2004

LIMITED EQUIPMENT WARRANTY

Equipment Development Company, Inc. herein referred to as EDCO warrants that each new unit manufactured by EDCO to be free from defects in material and workmanship in normal use and service for a period of (1) one year (except in the case of the cutter drum assembly on all model concrete asphalt planes, in which case the warranty period shall be 90 days) from date of shipment to the original buyer or equipment rental center owner.

EDCO will, at its option, repair or replace, at the EDCO factory or at a point designated by EDCO any part, which shall appear to the satisfaction of EDCO inspection to have been defective in material or workmanship.

This warranty, does not apply to failure occurring as a result of abuse, misuse, negligent repairs, corrosion, erosion, normal wear and tear, alterations or modifications made to the product without express written consent of EDCO: or failure to follow the recommended operating practices and maintenance procedures as provided in the products operating and maintenance manuals.

This warranty does not obligate EDCO to bear any transportation charges in connection with the replacement or repair of defective parts. This warranty does not obligate EDCO to bear any expense for travel time or of personnel in connection with any service calls.

Accessories or equipment furnished and installed on the product by EDCO but manufactured by others, including but not limited to engines, motors, electrical equipment, transmissions, etc., shall carry the accessory manufacturers' own warranty.

THIS WARRANTY IS IN LIEU OF ALL OTHER WARRANTIES, EXPRESSED OR IMPLIED, OR STATUTORY, INCLUDING ANY WARRANTIES OF MERCHANTABILITY OR OF FITNESS FOR A PARTICULAR PURPOSE.

LIABILITY LIMITATIONS

The remedies of the user set forth under provisions of warranty outlined above are the exclusive and total liability of EDCO with the respect to their sale or the equipment and service furnished hereunder, in connection with the performance or breach thereof, or from the sale, delivery, installation, repair or technical direction covered by or furnished under the sale, whether based on contract, warranty, negligence, indemnity, strict liability, or otherwise shall not exceed the purchase price of the unit of equipment upon which such liability is based.

EDCO will not in any event be liable to the user, any successors in interest or any beneficiary or assignee relating to this sale for any consequential, incidental, indirect, special or punitive damages arising out of this sale or any breach thereof, or any defects on, or failure of, or malfunction of the equipment under this sale based upon loss of use, lost profits or revenue, interest, lost goodwill, work stoppage, impairment of other goods, loss by reason of shutdown or non-operation, increased expenses of operation of the equipment, cost of purchase or replacement power of claims of users or customers of the user for service interruption whether or not such loss or damage is based on contract, warranty, negligence, indemnity, strict liability, or otherwise.

EDCO reserves the right to modify, alter and improve any part or parts without incurring any obligation to replace any part or parts previously sold without such modified, altered or improved part or parts.

No person is authorized to give any other warranty or to assume any additional obligation on EDCO's behalf unless made in writing and signed by an officer of EDCO.

Equipment Development Company, Inc.

USE ONLY GENUINE EDCO PARTS AND ACCESSORIES

For your own safety, the safety of others and the life of your machine

100 Thomas Johnson Drive, Frederick, MD 21702-4600 USA
Phone (301) 663-1600 • 1-800-638-3326
Fax (301) 663-1607 • 1-800-447-3326
Website: www.edcoinc.com • Email: sales@edcoinc.com

Printed in USA
©2004